UK & Ireland Official Distributor

MOTION CONTROL PRODUCTS

Motion Control Products Ltd.
11-15 Francis Avenue, Bournemouth
Dorset, UK, BH11 8NX
Tel.: +44 (0)1202 599922
enquiries@motioncontrolproducts.com
www.motioncontrolproducts.com

Thank you for using Kinco servo products! The accessories of Kinco every series & different types drivers are different. We advice you accept products before use.

1.Whether the model of a delivered FD series servo system is consistent with the specified model

2.Please check whether the product is damaged during transportation and use a screwdriver to confirm whether all fixing screws on the drive are loose.

3.Please check and accept the products according to the following product parts list to confirm whether there is any shortage.

Product parts list			
Articles			**Quantity**
Driver			1 set
Kinco 2S Servo Driver User Guidance			1 copy
Service guide			1 sheet
Certificate			1 sheet
Terminal	422S	SCSI 36P Plug	1
		6P Wiring terminal (head)	1
	432S 622S	SCSI 36P Plug	1
		6P terminal (head)	1
		6P Female base terminal	1
		4P Female base terminal	1

If there is any problem with any of the above, please contact our company or your supplier to solve it.

Shenzhen kinco Electric Co., Ltd.

en.kinco.cn

1 Driver installation requirements and precautions

1.1 Installation requirements

- Please install in the indoor control box without rain and direct sunlight, and the surrounding items should be non-flammable
- The installation place should be no cutting fluid, oil mist, iron powder and chip
- The installation place should be ventilated, dry and dust free,No vibration of the installation place
- This product complies with EMC standards 2014/30 / EU and low voltage standards 2014/35 / EU (LVD)

1.2 Installation environment

Environment	Condition
Operating temperature	0℃-40℃
Operating humidity	5-95% （No condensation）
Storage temperature	-10℃-70℃ （Not frozen）
Storage humidity	5-95% （No condensation）
Altitude	Rated power at 1000 m or below

1.3 Precautions

- Don't use gasoline, thinner, alcohol, acid or alkaline detergent to wipe the shell to avoid discoloration or damage for the shell;
- Please ensure that the environment is safe during transportation and storage. Please use the original packaging for storage and transportation;
- Please be familiar with the product knowledge and safety precautions before operating the driver;
- Please strictly install the servo driver according to the installation method shown in Figure 1-1.
- Driver and motor's power cables, brake cables and encoder cables cannot be over-stretched;
- Avoid any foreign objects entering the driver, conductive foreign objects such as screws and metal chips, or flammable foreign objects entering the driver may cause fire and electric shock. For safety reasons, please do not use the servo driver with damage or parts damaged.

Warning!

- **Beware of electric shock.**
- Cable must be securely mounted to power interface
- Be sure to disconnect the power when connecting the cables;
- Contact with live parts can cause serious damage and may lead to death;
- **This product must be installed in the electric box to use, and all the protective measures have been started.**
- **When servicing, cleaning and prolonged service interruptions, be careful before touching live parts：**
- Turn off the power of the electrical equipment by the power switch and prevent it from turning on again；
- After the power is off, check the charge lamp on the front of the unit. If the light is off ,you can touch the driver.

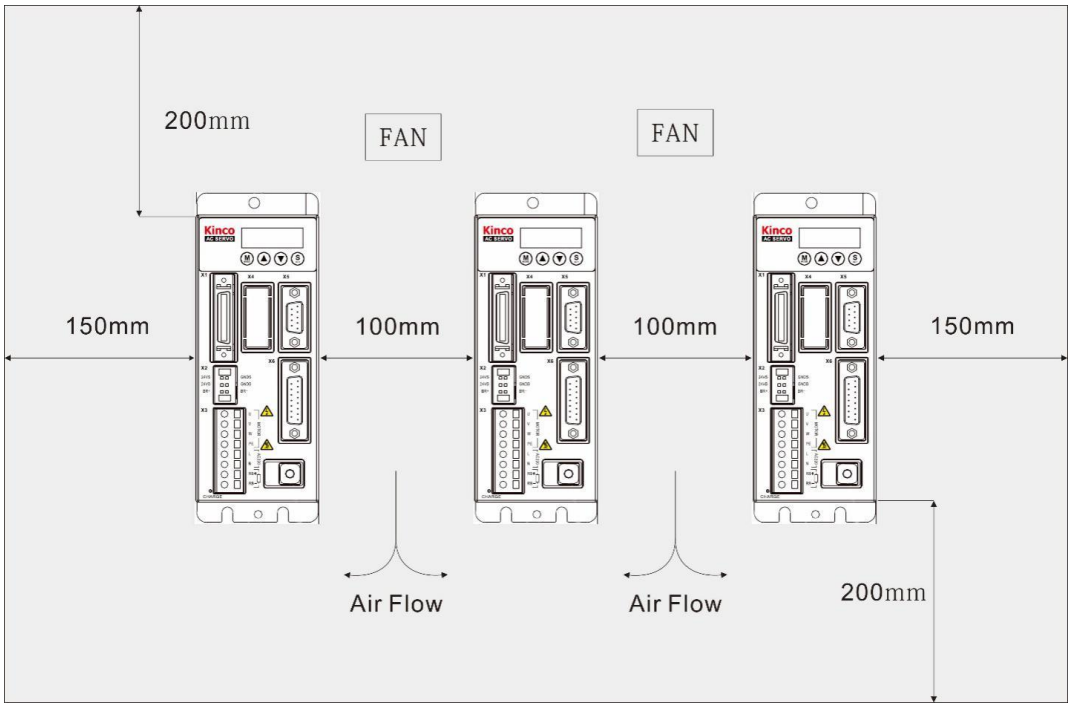

Figure 1-1 Installation Direction and distance Requirements

2 Driver wiring and pin definition

2.1 Interface Description

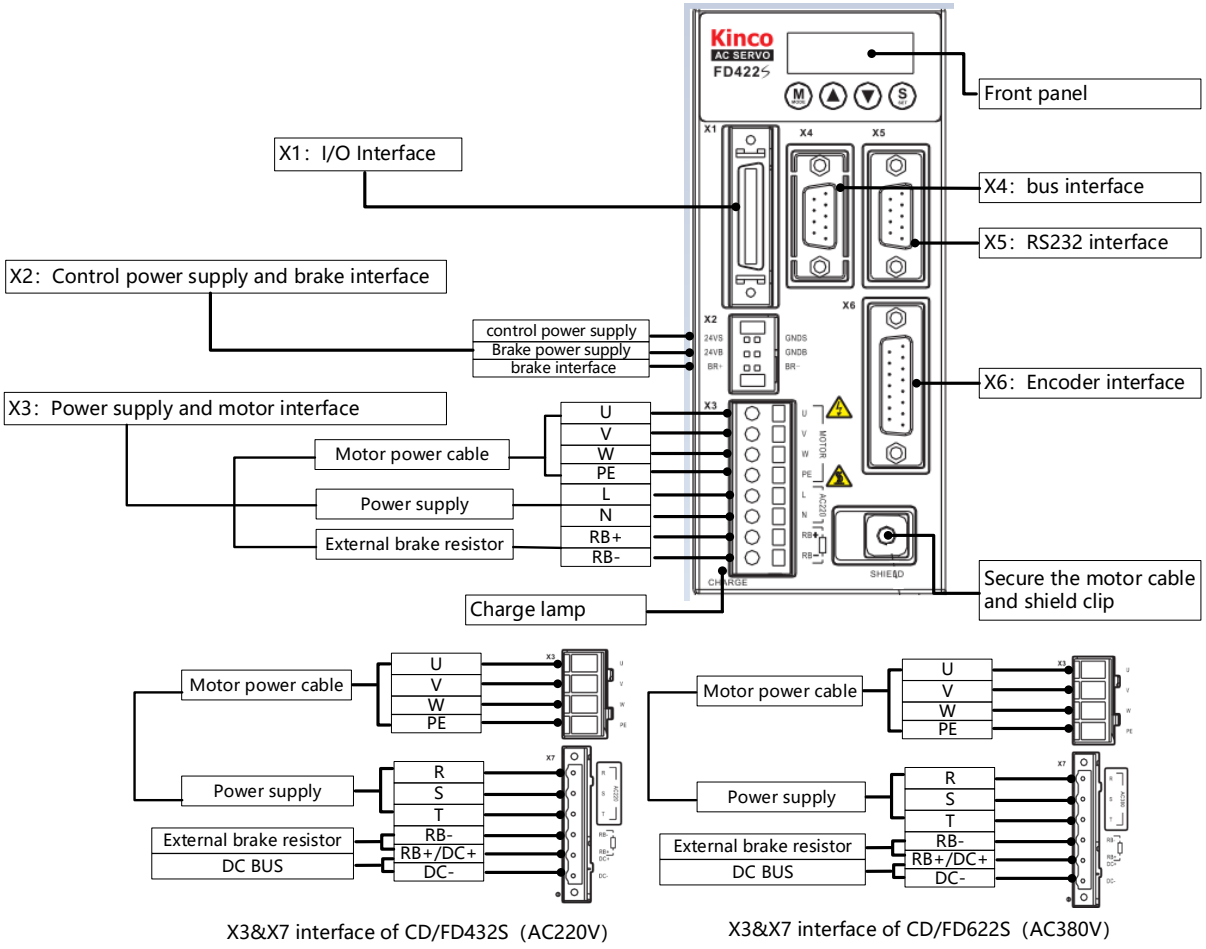

Figure 2-1 driver appearance drawing

2.2 **Driver wiring instructions**

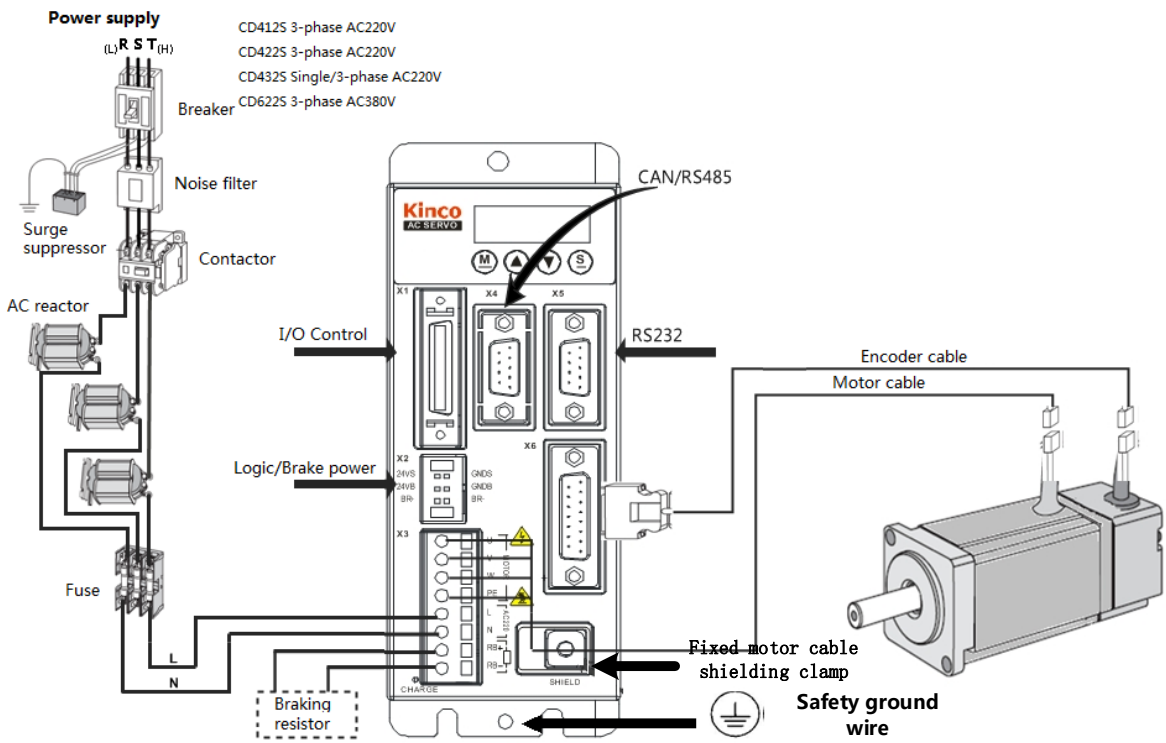

Figure 2-2 External Wiring Drawing of Driver

warning

- Ensure that all enclosures and cabinet doors are closed before powering the drive.
- When installing and maintaining the drive, all power must be cut off.After the driver is disconnected for at least ten minutes, the dc bus voltage of the measuring driver is lower than 36V or the charging indicator of the driver is off.
- Be sure not to remove safety devices and do not touch live parts and devices.
- Be sure to connect the PE wire correctly and ground the drive housing properly before the drive is powered on.

2.3 **Port definition instructions**

2.3.1 **External I / O port (X1) instructions**

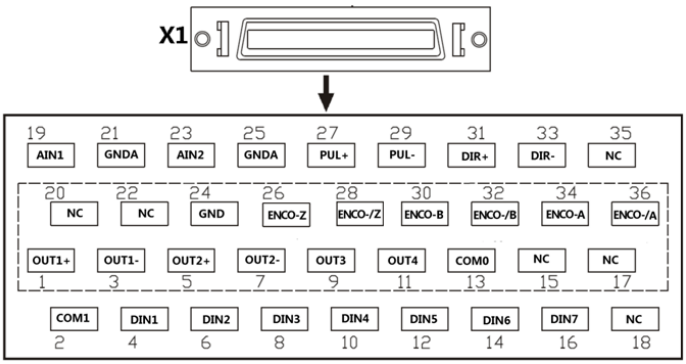

Figure 2-3 I/O interface X1 of FD2S driver

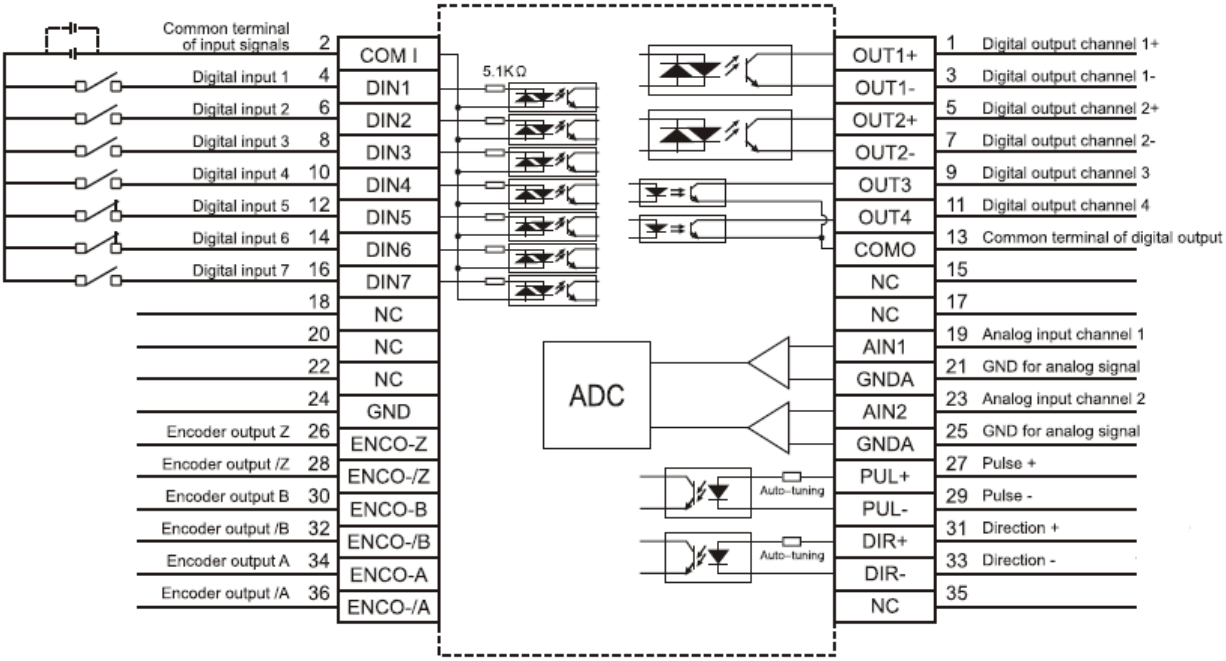

Figure 2-4 Wirings of the I/O interface X1 of FD2S driver

2.3.2 **Power and motor interface (X3) instructions**

Table 2-1 X3 port definition（For CD/FD412S、422S driver）

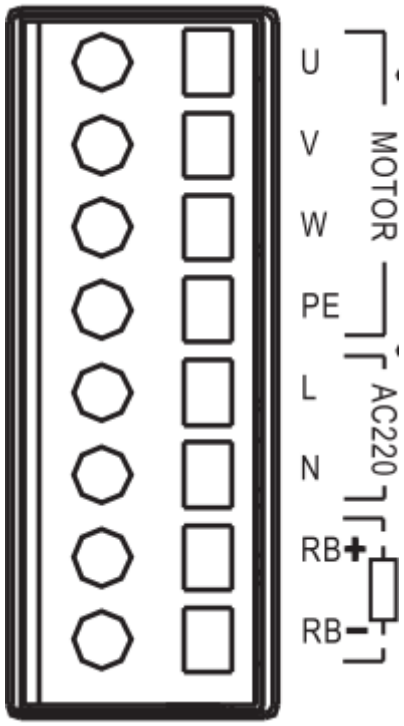

Pin	PIN function
UVW	U/V/W phase power output for servo motor
PE	Motor earthing
L、N	Supply power inputL/N： Single phase 200～240VAC +15%/-20% 47～63Hz 412S@2.0A 422S@4.0A Supply ground systems: TN-S, TN-C, TN-C-S, TT (not corner earthed).
RB+、RB-	Externalbrake resistor

Table 2-2 X3&X7 port definition（For CD/FD432S、622S driver）

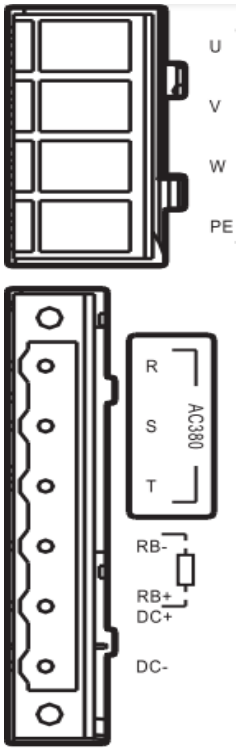

Pin	PIN function
UVW	U/V/W phase power output for servo motor
PE	Motor earthing
RST	432S Supply powe： Single phase 200～240VAC +/-10% 47～63Hz 11.0A 3- phase 200～240VAC +/-10% 47～63Hz 11.0A 612S/622S Supply powe: 3-phase380 ～ 415VAC +/-10% 47 ～ 63Hz 612S@5.5A622S@7.0A Supply ground systems: TN-S, TN-C, TN-C-S, TT (not corner earthed).
RB+、RB-	Externalbrake resistor
DC+、DC-	DC bus interface 432Sinput voltage DC310V±20% 612S/622S input voltage DC540V±20%

2.3.3 **RS232 serial port (X5) instructions**

Table 2-3 RS232 **interface (X3) instructions**

X3	Pin	Signal	Descriptions	Function
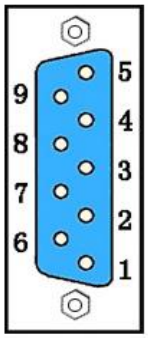	2	TX	Send data	The upper computer software Kinco servo+ can be connected for debugging and monitoring
	3	RX	Receive data	
	5	GND	Signal ground	

Table 2-4 **Bus communication interface (X4) instructions**

interface	RS485 interface		CANopen bus interface	
	Pin	Signal	Pin	Signal
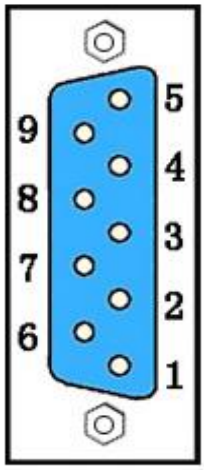	2	RX+	2	CAN_L
	3	TX+	3	GND
	5	GND	7	CAN_H
	6	+5V		
	7	RX-		
	8	TX-		

Table 2-5 Bus communication interface (X10) instructions

interface	pin	signal	descriptions
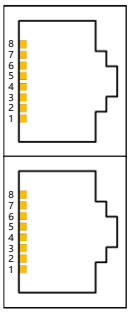	1	TD+	Send data+
	2	TD-	Send data_
	3	RD+	Receive data+
	6	RD-	Receive data_

3 Easy Use function

The new function Easy Use aim to help users to set the parameters of control loop quickly that the adjusted performance can satisfy the need of most of the applications. There is also a new area for users to set the important and frequently-used parameters.

3.1 Step of Easy Use

1. There are motor type setting and some frequently-used parameters inthe menu EASY, please set and confirm them one by one. After completing process of EASY, please run the machine. If the performance is satisfying, it is unnecessary to execute the process of tunE. Otherwise, please execute the process of tunE:
2. Please write 1 into tn03 to start the inertia measuring and then the servo will adjust the parameters of control loop automatically by the result.
3. Please run the machine. If the performance is unsatisfying, please change the stiffness in tn01. While changing the stiffness, please observe the performance of machine.

LED Display	Parameters	Description	Default
EA01	Motor Model	Search Table-1 for motor model	404b
EA02	Command Type	Modify the first LED on the right to change the command type, meanwhile the operation mode and definition of IO will change. 0：CW/CCW 1：P/D 2：A/B phase control 3：CW/CCW by RS422 4：P/D by RS422 5：A/B phase control by RS422 6：Analog Speed by AN1 7：Analog Speed by AN2 8：Communication Notice: It is invalid when users set 3,4,or 5 into EA01 in FD2S and CD2S When command type is 0-5, the control mode is -4. When command type is 6-7, the control mode is -3. When command type is 8, the default control mode has to be controlled by communication and DIN1, DIN2, DIN3 have no input function	1
EA03	Gear Factor numerator	In useif EA02 is set to 0-5. The default display is in decimal. If the number is bigger than 10000, the display is in hexadecimal. Notice: please see the different way of LED display between decimal and hexadecimal in Table-4.	1000
EA04	Gear Factor denominator		1000
EA05	Analog Speed Factor	In use if EA02 is set to 6 or 7. The relationship between Analog input voltage and speed of motor, and the unit is rpm/V Perhaps to be invalid if the factor is too big when the encoder is with high resolution.	300
EA06	1. Load Type 2. Application 3. Limit Switch 4. Polarity of Alarm Output	The meaning of each LED from right to left （1）Load Type, influences the control loop. 0: no shaft load, 1: belt drive, 2: ball screw （2）Application, influences the control loop. 0: P2P, 1: CNC, 2: Master/Slave mode （3）Limit Switch, 0: driver default, 1: disable the limit switch function （4）Polarity of Alarm Output 0: normally closed contacts, 1: normally open contacts.	1001
EA00	Save Parameters	Write “1” to save all the parameters. Write “2” to save all the parameters and restart the servo, users **MUST** reboot the driver if changing the motor type) Write “3” to reboot the servo Write “10” to initialize the parameters Notice: After saving the parameters, the servo will set the control loop according to the load type and application	-
tn01	Stiffness Level	Level 0-31，determine the BW of velocity loop and the position loop The bigger the level is, the bigger the stiffness is. If this parameter is too big, the gain will change remarkably and the machine will be unstable. Notice: For safety, when setting tn01, the data will be valid immediately, and the parameters should be set level by level.	belt:10 screw:13

LED Display	Parameters	Description	Default
tn02	InertiaRatio	Ratio of load inertia and motor inertia * 0.1. Servo will calculate K_Load automatically according to inertia ratio, and influence the proportion gain of velocity loop. Formula: Kvp=VC_LOOP_BW×K_Load/4096. VC_LOOP_BW represent the BW of velocity loop. Notice: For safety, when setting tn02, the data will be valid immediately, and the parameters should be set level by level.	belt:30 screw:50
tn03	Inertia measuring	1) Write 1 to enable the motor and start the inertia measuring. Set this parameter to 1 will run the inertia measuring function. It contains the following operation: 1.take over the enable function and the operation mode function of the IO function 2. switch the operation Mode to 11 3. enable the driver 4. set 0x2FF00C to 11 5. start shaking and get the result 6. give back the enable function and the operation mode function of the IO function 2) After confirming, the LED will stop flashing, and will show the Tuning result while 1 means success; -1,-2,-3,-4 means failure for some reasons. If the tuning is successful, control loop parameters will be set, and the stiffness will be set to 4-13 according to the inertia ratio, and tn03 will show 1. If the tuning failed, the stiffness will be 10 while the inertia ratio will be 30(*0.1) and the tn03 will show the error code.	-
tn04	Measuring Distance	Distance of inertia measuring*0.01. For example, 0022 represent 0.22 motor revolutions, the maximum is 0.4 revolutions.	22
tn00	Saving parameters	Write 1 to save all the parameters. Write 2 to save all the parameters and restart the servo , Write 3 to reboot the servo Write 10 to initialize the parameters Notice: Users **MUST** reboot the driver if changing the motor type.	
Notice: The EASY and tunE menu are designed to set by button originally. If users initialize parameters by PC software, EASY and tunE will only display EA00,EA01 and tn00 for safety. Users have to confirm motor type by EA01, after that the parameters become default and the LED will display in a complete way.			

3.2 Notice

1. Inertia measurement might cause shaking of the machine, please be ready to shut off the power or driver immediately.
2. Keep space for inertia measuring.
3. It is strongly recommended that execute the flow of tunE after the flow of EASY, and adjust the stiffness.
4. The EASY and tunE menus are designed to set by button originally. If users initialize parameters by PC software, EASY and tunE will only display EA00, EA01 and tn00 for safety. Users have to confirm motor type by EA01, after that the parameters become default and the LED will display in a complete way.

3.3 Reason for the failure of tuning

1. Wrong wire connection；
2. configure the wrong motor type；
3. Stiffness is too low；
4. Mechanical gap exists；
5. Accelerated and decelerated torque are smaller than friction torque.

3.4 EASY and tunE parameter description

Stiffness	Kpp/0.01Hz]	Kvp/[0.1Hz]	Output filter[Hz]	Stiffness	Kpp/[0.01Hz]	Kvp/0[0.1Hz]	Output filter[Hz]
0	70	25	18	16	1945	700	464
1	98	35	24	17	2223	800	568
2	139	50	35	18	2500	900	568
3	195	70	49	19	2778	1000	733
4	264	95	66	20	3334	1200	733
5	334	120	83	21	3889	1400	1032
6	389	140	100	22	4723	1700	1032
7	473	170	118	23	5556	2000	1765
8	556	200	146	24	6389	2300	1765
9	639	230	164	25	7500	2700	1765
10	750	270	189	26	8612	3100	1765
11	889	320	222	27	9445	3400	∞
12	1056	380	268	28	10278	3700	∞
13	1250	450	340	29	11112	4000	∞
14	1500	540	360	30	12500	4500	∞
15	1667	600	392	31	13889	5000	∞
Notice: When the setting of stiffness or inertia ratio makes the Kvp value bigger than 4000, it isn't useful to raise stiffness any more, and it will decrease bandwidth if the inertia ratio becomes increased more then. If the resolution of encoder is less than 80000 inc per revoluiution, the range of stiffness is from 0 to 22.							

Table3-2 Operation of Key

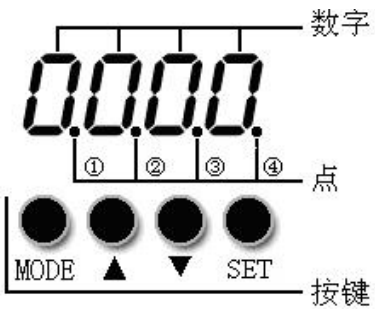

Description	
MODE	Switch menus； When setting parameters, short button press can shift the active digit, long button press can return to the previous menus.
▲	Press▲ can increase the number, long press can increase quickly
▼	Press▼ can decrease the number, long press can decrease quickly
③	Dot Shining represent displaying in hexadecimal, otherwise in decimal.
SET	Enter the selected menu； Enter the status of parameters setting； affirm the parameters；
Display FFF.F	No motor configured, please operate according to the flow chart of “Easy” and make it sure to save the parameters and reboot the servo.

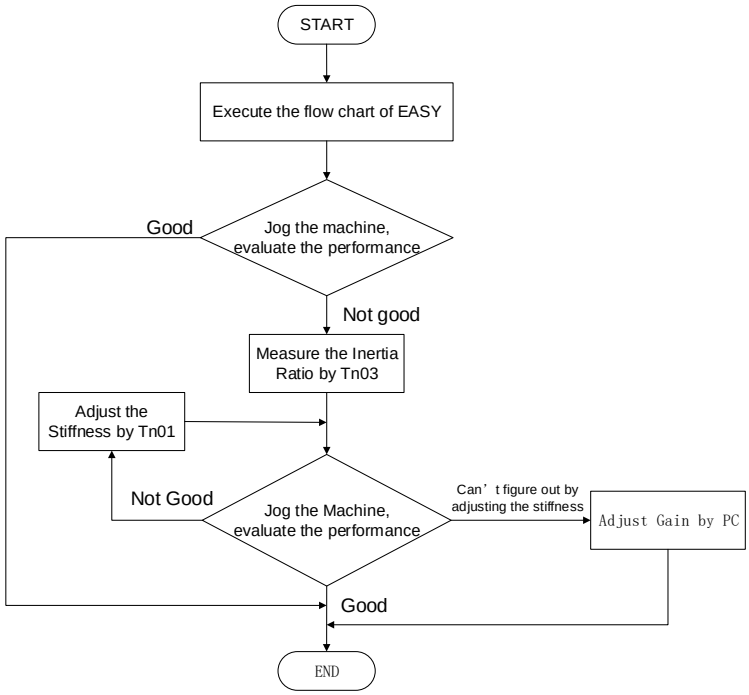

Notice: Must execute in order, exit automatically if there is no operation in 30s, and users have to start again. The data input will be valid immediately, but need to be saved by EA00

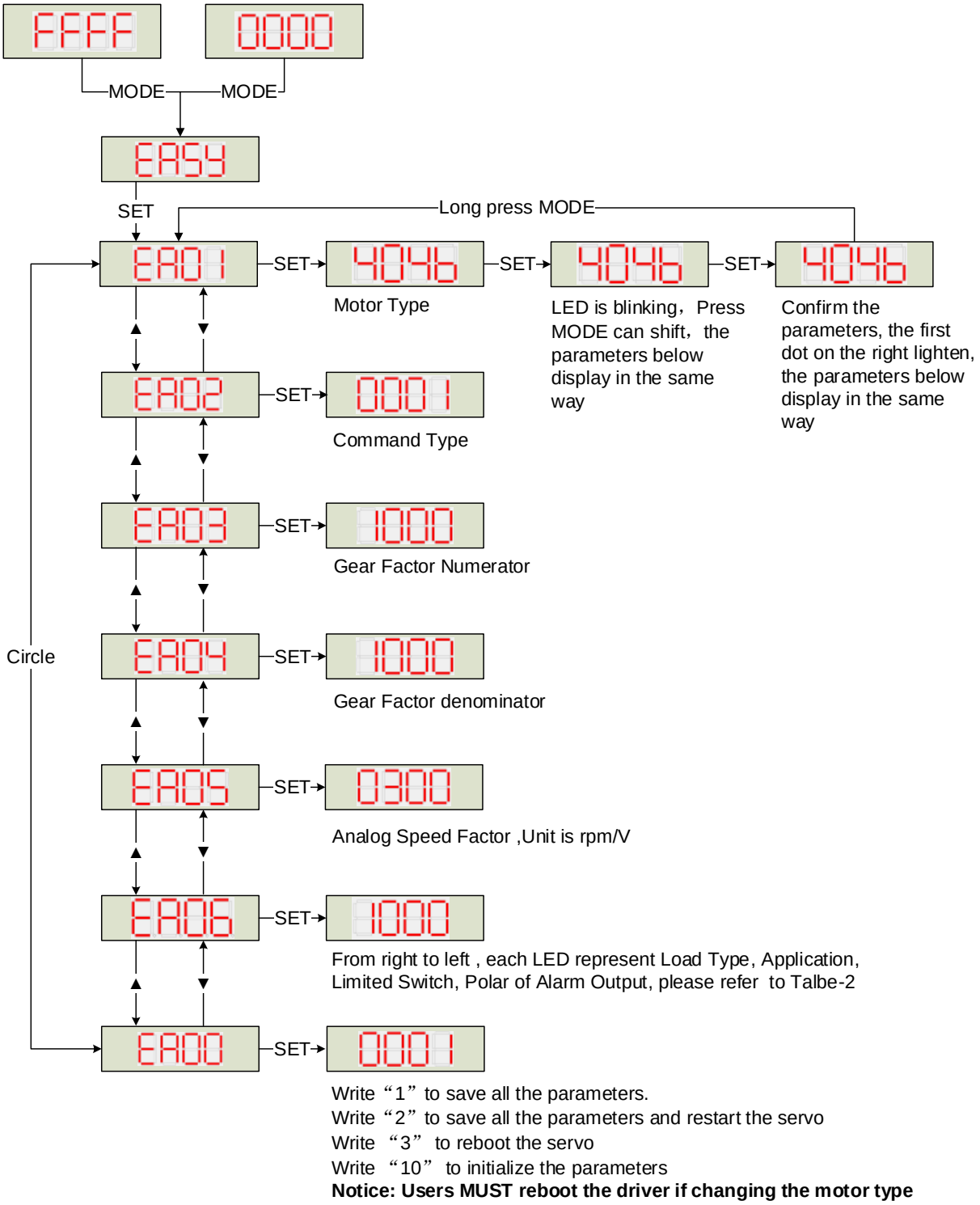

Figure 3-1 Easy flow chart

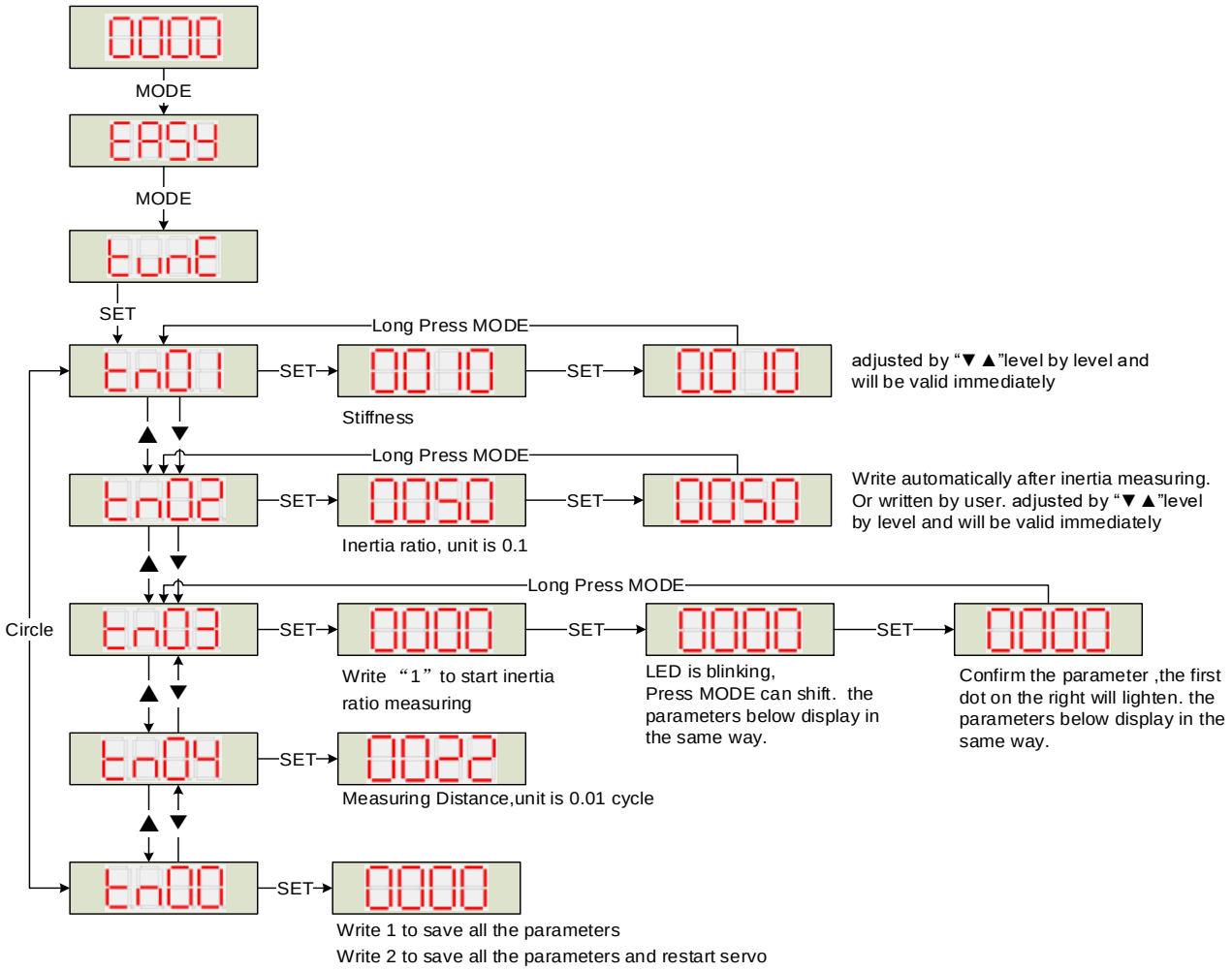

Figure 3-3 TunE flow chart

Notice: The data will be valid immediately, but need to be saved by tn00.

For safety, when setting tn01 or tn02, the data will be valid immediately, and these two parameters should be set level by level.

3.5 Commissioning instructions

Digital panel trial operation steps

- Press "MODE", Enter F004, Select object address"d4.18", Confirm the motor model;
- Press "MODE" to enter F000 group, select the object address "d0.02" and set the target speed., Its unit is RPM; ; It is recommended to run at a speed lower than 100RPM to avoid personal injury and property damage.;
- Press "MODE" to enter F006 group and conduct key test. The default value is d6.40. Use "▼" to adjust the data to d6.31 first, then press "▼" to automatically change the data to d6.15, and then use "▲" to adjust the data to d6.25; ;
- Press "SET" [originally ENTER] and the trail operation is activated. At this time, the digital tube is displayed as "abc.d" and the motor is in a loose shaft state. When "▲" or "▼" is pressed for a long time, the motor will be automatically enabled and will operate according to "+target speed" or "-"target speed ",respectively. During the process of trail operation, the digital tube will display the motor speed in real time.
- The default counterclockwise direction of the motor is forward rotation (viewed from the direction facing the motor shaft). If the direction cooperation of the machine does not meet with the requirements, the default rotation direction of the motor can be changed by changing the speed position direction control of F002 group object address "d2.16". The default value of "d2.16" is 0. Changing to 1 will change the default rotation direction.

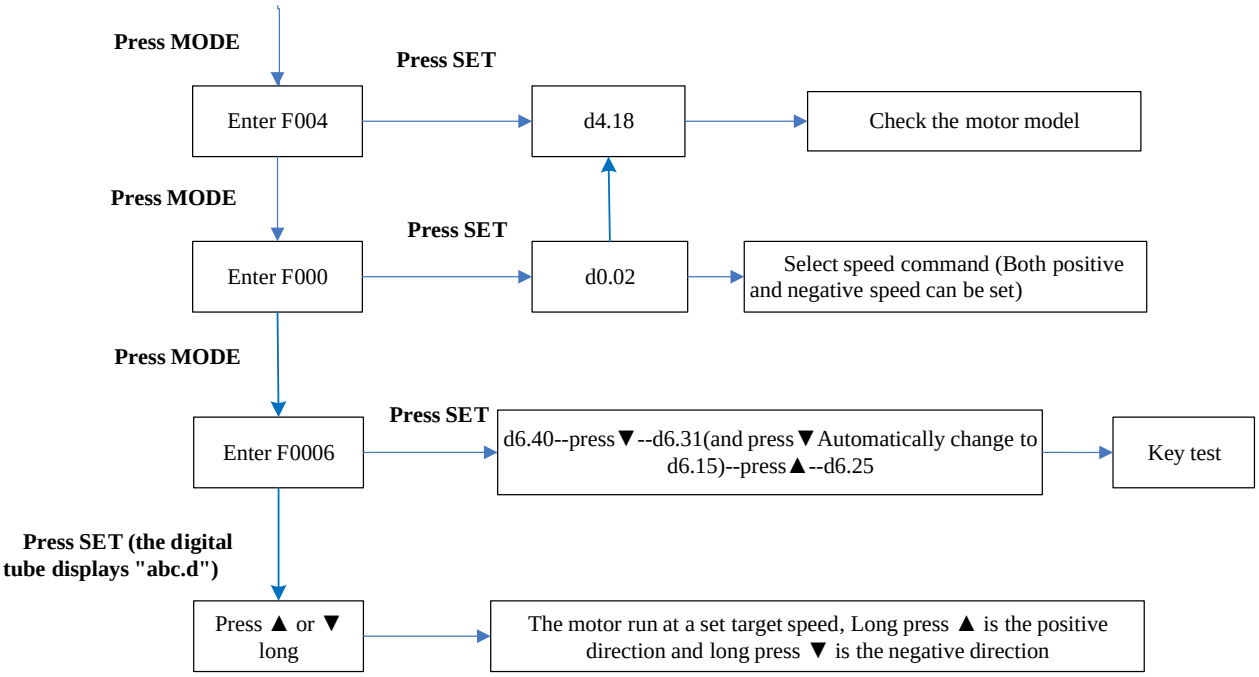

Figure 3-4 Block diagram of trail operation steps

Kincoservo+ Operating procedure

- Enter menu bar-driver-control panel-F004, the user configures the motor through the "motor model" dialog box of f004 group, press enter key to confirm after setting, and reboot the driver.
- Cancel the "drive enable" and "drive operating mode control" defined in I/O control.
- Open the basic operation interface, set the "operation mode" to "-3" and the speed to 100RPM, and change the "control word" to f after completion. If you need to run in the opposite direction, set the speed to a negative value.

The configuration between motor and servo

PC	LED	Motor Model	Suitable Servo					
LED CODE:EA01			CD412S FD412S	CD422S FD422S	With Fan CD422S-AF FD422S-□F	CD432S FD432S	CD612S FD612S	CD622S FD622S
K@	404.b	no motor configured	LED displays FFF.F					
G0	3047	SMC60S-0020-30A■K-3LK□		√				
G1	3147	SMC60S-0040-30A■K-3LK□		√				
G2	3247	SMC80S-0075-30A■K-3LK□		√				
GB	4247	SMC130D-0100-20A■K-4LKP			√			
GO	4F47	SMC130D-0150-20A■K-4LKP				√		
GP	5047	SMC130D-0200-20A■K-4LKP				√		
GC	4347	SMC130D-0150-20A■K-4HKP					√	
GD	4447	SMC130D-0200-20A■K-4HKP					√	
GR	5247	SMC130D-0300-20A■K-4HKP						√
GQ	5147	SMC130D-0300-30A■K-4HKP						√
KZ	5A4B	SMH40S-0005-30A■K-4LKH	√					
KY	594B	SMH40S-0010-30A■K-4LKH	√					
K0	304B	SMH60S-0020-30A■K-3LK□		√				
K1	314B	SMH60S-0040-30A■K-3LK□		√				
K2	324B	SMH80S-0075-30A■K-3LK□		√				
K3	334B	SMH80S-0100-30A■K-3LK□				√		
K4	344B	SMH110D-0105-20A■K-4LKC				√		
K5	354B	SMH110D-0125-30A■K-4LKC				√		
K6	364B	SMH110D-0126-20A■K-4LKC				√		
K7	374B	SMH110D-0126-30A■K-4HKC						√
K8	384B	SMH110D-0157-30A■K-4HKC						√
K9	394B	SMH110D-0188-30A■K-4HKC						√
KB	424B	SMH130D-0105-20A■K-4HKC				√		√
KC	434B	SMH130D-0157-20A■K-4HKC				√		√
KD	444B	SMH130D-0210-20A■K-4HKC						√
KE	454B	SMH150D-0230-20A■K-4HKC						√
P4	3450	SMG130D-0100-20A■K-4LKG			√			
P3	3350	SMG130D-0100-10A■K-4LKG			√			
P5	3550	SMG130D-0150-20A■K-4LKG				√		
P7	3750	SMG130D-0200-20A■K-4LKG				√		
P6	3650	SMG130D-0150-20A■K-4HKG					√	
P8	3850	SMG130D-0200-20A■K-4HKG					√	
PC	4350	SMG130D-0300-20A■K-4HKG						√
YZ	5A59	SMS40S-0005-30J■K-5LKU	√					
ZZ	5A5A	SMS40S-0005-30K■K-5LKU	√					
YY	5959	SMS40S-0010-30J■K-5LKU	√					
ZY	595A	SMS40S-0010-30K■K-5LKU	√					
Y0	3059	SMS60S-0020-30J■K-3LKU		√				
Z0	305A	SMS60S-0020-30K■K-3LKU		√				
Y1	3159	SMS60S-0040-30J■K-3LKU		√				
Z1	315A	SMS60S-0040-30K■K-3LKU		√				
Y2	3259	SMS80S-0075-30J■K-3LKU		√				
Z2	325A	SMS80S-0075-30K■K-3LKU		√				
YB	4259	SMS130D-0100-20J■K-4LKP			√			
ZB	425A	SMS130D-0100-20K■K-4LKP			√			
YO	4F59	SMS130D-0150-20J■K-4LKP				√		
ZO	4F5A	SMS130D-0150-20K■K-4LKP				√		
YP	5059	SMS130D-0200-20J■K-4LKP				√		
ZP	505A	SMS130D-0200-20K■K-4LKP				√		
YC	4359	SMS130D-0150-20J■K-4HKP					√	
ZC	435A	SMS130D-0150-20K■K-4HKP					√	
YD	4459	SMS130D-0200-20J■K-4HKP					√	
ZD	445A	SMS130D-0200-20K■K-4HKP					√	
YQ	5159	SMS130D-0300-20J■K-4HKP						√
ZQ	515A	SMS130D-0300-20K■K-4HKP						√
YR	5259	SMS130D-0300-30J■K-4HKP						√
ZR	525A	SMS130D-0300-30K■K-4HKP						√
F4	344.6	85S-0025-05AAK-FLFN-02		√				
F6	364.6	85S-0035-05AAK-FLFN-02		√				
F8	384.6	85S-0045-05AAK-FLFN-02		√				